Toward Formalizing Dialectical Argumentation

K. Freeman A. Farley
Department of Computer and Information Science
University of Oregon
Eugene, OR 97403
503-346-1381 503-346-3414
kath@cs.uoregon.edu art@cs.uoregon.edu

Abstract

We explore the use of argumentation for justifying claims reached by plausible reasoning methods in domains where knowledge is incomplete, uncertain, or inconsistent. We present elements of a formal theory of argumentation that includes two senses of argument, argument as supporting explanation and argument as dialectical process. We describe a partial implementation of the theory, a program that generates argument structures that organize relevant, available, plausible support for both a claim and its negation. Then we describe a theory of argument as dialectical process, where the format of a two-sided argument is used to intertwine the strengths and weaknesses of support for competing claims, so arguments can be refuted and directly compared.

Introduction

We explore the use of argumentation for reasoning in domains where knowledge is incomplete, uncertain, or inconsistent, i.e., *weak theory domains*. A derivation, or "proof", of a claim in such a domain should show that the claim is *dialectically valid* (Barth & Krabbe, 1982), i.e., there is plausible support for the claim that withstands all attempts to refute it, and there is no such support for any counter-claim. We contend that the ability to argue to dialectically valid claims is essential for justifying claims reached as a result of reasoning in weak theory domains. Even in failing to realize dialectical validity, argumentation can be used as a method for locating, highlighting, and organizing relevant information in support of and counter to proposed claims.

Argumentation has long been viewed as an important reasoning method and topic of research in philosophy, e.g., (Rescher, 1977), (Toulmin, 1958). Recently, argumentation has been investigated from the standpoints of rhetoric, e.g., (Horner, 1988), discourse analysis, e.g., (Flowers, McGuire, & Birnbaum, 1982), legal reasoning, e.g., (Ashley, 1989), and default reasoning, e.g., (Lenat & Guha, 1990). Our work extends this previous work to focus on a theory of argumentation for decision support and justification for reasoning in weak theory domains.

Our model of argumentation is based on the following, complementary definitions of argument: (i) "the grounds ... on which the merits of an assertion are to depend" (Toulmin, 1958), and (ii) "a method for conducting controversial discussions, with one contender defending a thesis in the face of object[ions] and counterarguments made by an adversary" (Rescher, 1977). There are two senses of argument posed by these definitions. The first defines argument as a supporting explanation, i.e., an entity; the second concentrates on argument as a process in which two or more agents engage. Thus, the representation of arguments as structured entities and the generation of arguments as dialectical processes are both crucial to our theory.

For argument as supporting explanation, we create argument structures that organize relevant, available support for a claim, and also for its negation. Argument as dialectical process includes the tasks of supporting and refuting claims. In successful refutation, supporting arguments for a claim are shown to be invalid, or at least controversial. Two sides to an argument take turns supporting, refuting, and defending (i.e., refuting refutations) claims.

Since the ability to represent and generate arguments as supporting explanations is a necessary prerequisite for dialectical argumentation, we first concentrated on this task (Freeman & Farley, 1992). In the next section, we briefly summarize that work. Then, using those results, we describe our theory of dialectical argumentation. Finally, we make concluding remarks.

Argument as supporting explanation

We represent a supporting argument in a modified version of the form given by Toulmin in *The Uses of Argument* (Toulmin, 1958). For Toulmin, an argument comprises *data* (i.e., evidence, grounds) said to support a *claim* (i.e., conclusion). The authority for taking the step from data to claim is called a

warrant. The warrant may have *backing*, or justification. The data and the warrant may not be enough to establish the claim conclusively, i.e., the resultant claim may be *qualified*. The claim may be subject to *rebuttals*, special circumstances where the warrant would not hold. For example, the claim "the grass will be wet this morning" is supported by the data "it rained last night", due to the warrant "rain entails wet grass", unless there is a rebuttal, e.g., "the grass was covered".

We refer to this basic structure as a "Toulmin argument unit", or *tau*. In our representation of argument, the data and warrant parts of a tau are also seen as claims, and therefore can have rebuttals and qualifications. (Since all the major elements of a tau are claims, we will refer to these as data, warrant, and *conclusion*, to avoid ambiguity.) In the example, "it rained last night" and "rain entails wet grass" would be viewed as claims in their own right, as well as support for "the grass will be wet this morning".

Also in our representation, all claims (not just warrants) must be supported, i.e., have backing. We define two types of backing: *atomic*, as information from outside the domain of argumentation ("inartistic proofs", (Horner, 1988)), and *tau*, where a conclusion is supported by data and a warrant. A claim may have multiple backings. In the example, the claim "the grass will be wet this morning" is supported by a tau. The claims "it rained last night" and "rain entails wet grass" also need backing. The warrant "rain entails wet grass" would have atomic backing (currently, all warrants have atomic backing). Support for "it rained last night" might also be atomic, or this claim could be the conclusion of another tau, e.g., "it rained last night" because "there was thunder and lightning last night" and "thunder and lightning usually means rain". An argument, then, consists of chains of claims and their backing. Each claim has an associated *rebuttal*. In our representation, a rebuttal is a rival claim (currently defined as the negation of the claim) and the arguments that support the rival conjecture. For example, the rebuttal for the claim "wet grass" is "not wet grass", plus its backing (and vice versa). Extenuating circumstances are represented by warrants that support the negation of a claim, for example, "rain and a covering for the grass leads to not wet grass". Since warrants represent a relationship between two claims, they have a slightly different structure from other claims. In addition to backing, a qualification, and a rebuttal, a warrant has an *antecedent* and a *consequent*. A warrant also has a *type* associated with it which represents the strength with which its consequent can be drawn from the given antecedent. Current types are: *sufficient (s)*, *default (df)*, and *evidential (ev)*.

In generating a tau, a warrant is applied to data to support a conclusion. For example, the warrant "rain (antecedent) -> wet grass (consequent)" may be applied

Table 1.

warrant	data	conclusion	reasoning step	
p -> q	p	q	modus ponens	(MP)
p -> q	~q	~p	modus tollens	(MT)
p -> q	q	p	direct abduction	(ABD)
p -> q	~p	~q	contrapositive abd.	(ABC)

to the data "rain" to draw the conclusion "wet grass". While the antecedent and consequent indicate the normal direction of a warrant's application, warrants are used in other ways as well. For example, the above warrant could be applied to the data "wet grass" to support the conclusion "rain".

Given a warrant with antecedent p and consequent q, we define allowable *reasoning steps* in Table 1. The last two reasoning steps are fallacies in deductive reasoning (asserting the consequent and denying the antecedent, respectively). However, they are often used in plausible reasoning to indicate support for a claim. Polya (Polya, 1968) discusses similar "patterns of plausible inference". He calls them "examining a ground" (MP, ABC in Table 1) and "examining a consequence" (MT, ABD in Table 1).

Qualifications capture the support for claims reached as a result of arguments using uncertain warrants and plausible reasoning. We use the following qualifications: *strong* (!), *usual* (!'), *credible* (+), and *contingent* (Δ). The first three are ranked in decreasing order of support; contingent indicates lack of support.

The qualification on any claim resulting from the application of a warrant (i.e., a tau backing) is the least of the qualifications associated with the application: the qualification(s) on the data support, the qualification on the warrant, and the qualification derived from the warrant type and reasoning step applied ("link qualification"). (See Table 2.) The weakest link approach to propagating support in an argument is discussed in (Pollock, 1991); its appropriateness for plausible reasoning, as opposed to probabilistic reasoning, is discussed in detail in (Rescher, 1976).

A program that generates all argument structures for a given claim and sets of input data and warrants has been implemented. We give an example of the argument structures it generates for the following "Bermuda" problem, based upon the classic example of Toulmin (Toulmin, 1958):

Table 2.

warrant type	reasoning step	link qualification
$->_s$	MP, MT	strong
$->_s$	ABD, ABC	credible
$->_{df}$	MP, MT	usual
$->_{df}$	ABD, ABC	credible
$->_{ev}$	MP, MT	credible
$->_{ev}$	ABD, ABC	credible

Usually anyone born in Bermuda can be assumed to be a British subject (br). However, someone born in Bermuda (bb) to alien parents (ap) is not a British subject. People carrying British passports (bp) are British subjects. Most people who are English speaking (es) and have a Bermudan identification number (id#) were born in Bermuda. Finally, any person with a Bermudan id number is eligible to obtain Bermudan working papers (wp). We have just been introduced to Harry, who speaks English, has a passport that is not a British passport, and shows us his Bermudan working papers. We are wondering whether he is a British subject.

The above knowledge can be represented as warrants and data, as follows:

(w1 ((bb)) --> $_{df}$ ((br)) ! given)
(w2 ((bb) (ap)) --> $_{df}$ ((not br)) ! given)
(w3 ((bp)) --> $_{df}$ ((br)) ! given)
(w4 ((es) (id#)) --> $_{ev}$ ((bb)) ! given)
(w5 ((id#)) --> $_{df}$ ((wp)) ! given)
(d1 (es) ! given)
(d2 (not bp) ! given)
(d3 (id#) ! given)

Argument structures summarizing the support for and against the claim that Harry is a British subject are shown in Figure 1. Claims are shown as nodes and warrants are represented as arcs between them. The notation above an arc indicates the id of the applicable warrant, and notation below the arc gives the reasoning step and warrant type. Notation in the claim nodes gives the statement of the claim and its qualification. Contingent claims are darkened.

Dialectical argument

Using the representation of arguments as supporting explanations described in the previous section, we now expand our theory of argumentation to include argument as a dialectical process. Arguments supporting alternative claims are refuted and defended in turn. The advantages of the dialectical format are at least two-fold: (1) the strengths and weaknesses of support for competing claims are explicitly highlighted and directly compared; and (2) the two-sided format serves as a heuristic to control the generation of arguments in a more directed manner.

Definitions

Generating dialectical arguments results in the intertwining of the argument structures that support a claim and its negation. We expand the qualification field for a claim to summarize the support for both the claim and its negation. Using this representation of the qualification, we define several terms for our theory of dialectical argumentation.

Support for the input claim is *Side-1 support* and support for the negation of the claim is *Side-2 support*. Support for a claim is *consistent*, for mutually exclusive conjectures, if there is support on one side of the claim and no support on the other side, i.e., the qualification slot for one side only contains a "!", "!'", or "+". A claim that is not consistent is *controversial*. A claim that has consistent Side-1 support is a *Side-1 check*, else it is a *Side-2 check*. A claim is *terminal* when there are no argument moves available that could change its qualification. A claim that is in terminal check for a side is a *winner* for that side. A claim with terminal consistent support is said to be *dialectically valid*. As shown in Table 3, the "burden of proof" is on Side-1 to establish uncontroversial support for its claim.

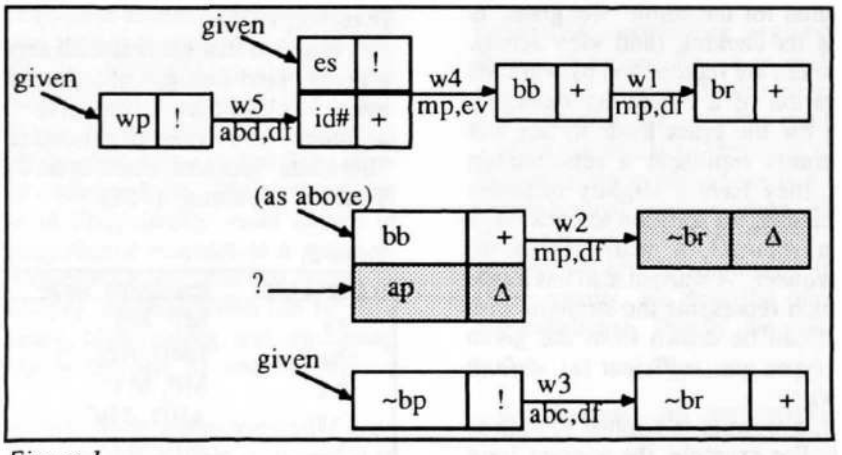

Figure 1.

Table 3.

Side-1 support for C	Side-2 support for ~C	support is not terminal	support is terminal
no	no	controversial; Side-2 check	Side-2 winner
yes	no	consistent; Side-1 check	Side-1 winner; C dialectically valid
no	yes	consistent; Side-2 check	Side-2 winner; ~C dialectically valid
yes	yes	controversial; Side-2 check	Side-2 winner

Generating dialectical arguments

Dialectical argument is the process of moving through a search space of qualifications for a claim, seeking a winner qualification for one's own side and avoiding states that are winners for the other side. Progress through the state space is achieved and constrained by argument moves. Move selection is driven by a heuristic evaluation process that is based on the possibility of forward progress toward a goal for the side, i.e., a positive change in the qualification of the input claim from the point of view of the side; likelihood of success for the move, based on, for example, the current qualification of a claim; and argument coherence.

Dialectical argument begins in a stylized fashion: Side-1 attempts to find support for its claim, where "support" means an argument for the claim that results in the claim having a Side-1 check qualification. If there is no support, the argument ends, and Side-1 concedes the claim. (This does not mean the negation of the claim has been established; that would require another argument, with the input claim as the negation of the current claim.) If Side-1 is able to find support for the claim, control is given to Side-2, to try to refute the support established by Side-1. Then Side-1 in turn will attempt to refute the refutations. A side chooses moves until it achieves a check qualification or has no more moves. The argument ends when a side is a winner or has no more moves.

Dialectical argument moves

We define the primary tasks of dialectical argumentation to be (1) supporting a claim; and (2) refuting a claim or its supporting arguments. Generating support for a claim was discussed earlier. In this section, we focus our attention on refuting a claim or its supporting arguments. We begin to give operational meaning to the tasks of dialectical argumentation by defining them in terms of argument moves needed to implement them (see Table 4).

Table 4.

ARG TASKS	MOVES	GIVEN	SHOW	IMPLEMENT USING	SUCCESS C IS -
support C	(a) support	C	X->C ^ X	find MP support	supported
			C->X ^ X	find ABD support	supported
			~C->X ^ ~X	find MT support	supported
			X ->~C ^ ~X	find ABC support	supported
refute C					
undercut C	(b) invalid data	X->C ^ X		refute X	not supported/ controversial
	(c) exception	X->$_{df/s}$C ^ X	X^Y->$_{df/s}$~C ^ Y	find MP support for ~C	not supported
	(d) inapplicable evidence	X->~C ^ ~X	Y->$_{df/s}$~C ^ Y	find MP, MT support for ~C	not supported
	(e) unneeded explanation	C->$_{df/s}$X ^ X	Y->$_{df/s}$X ^ Y	find MP support for X	not supported/ controversial
	(f) missing evidence	X->$_{ev}$C ^ X	Y->$_{ev}$C ^ ~Y	find ABC support for ~C	controversial
	(g) conflicting evidence	X->$_{ev}$C ^ X	Y->$_{ev}$~C ^ Y	find support for ~C	controversial
rebut C	(h) proof by contradiction	C	C->...->~C	find MT support for ~C	controversial
	(i) reductio ad absurdam	C	C->...->Z ^ ~Z	find MT support for ~C	controversial
	(j) support rival claim	C	X->~C ^ X	find support for ~C	controversial

We distinguish two general types of refutation: (1) *undercutting* and (2) *rebutting* (following (Pollock, 1992), though not exactly). Undercutting is accomplished by finding weaknesses in purported support for a claim. With respect to the structure of a tau, undercutting questions the sufficiency of the data support and the link fields (i.e., warrant type and reasoning type). Questioning the data that supports a conclusion amounts to attempting to refute the data-claim of the tau, moving the argument a step back. Following up on less than certain warrant and/or reasoning types in the support for a claim leads to argument moves that: (i) search for exceptions to default rules; (ii) attempt to show that weak evidence is irrelevant in the face of other, strong evidence; (iii) try to find alternative explanations for data, defeating claims that had been hypothesized as explanations for the same data; (iv) search for missing evidence, or evidence for a rival claim, to emphasize that the evidence given in support of a claim is insufficient.

If an undercutting move is successful, it can result in the withdrawal of an argument. This in turn leaves the conclusion of the argument unsupported. For example, in the Bermuda problem the claim "id#" is hypothesized as an explanation for data "wp". If the problem contained additional knowledge, e.g., "special skills" and "special skills ->$_{df}$ wp", "wp" can be shown to be otherwise explainable, and should be withdrawn as support for "id#". The qualification of the claim "id#" would change from "+!?" to "?!?" as a result of the undercutting argument.

Also in Table 4 we see that some methods for undercutting a claim may result in support for a rival claim. These leave the original argument as it was, but highlight its inadequacies. As a result, its conclusion may become controversial or unsupported.

In contrast, rebutting moves attack a claim without regard for its supporting arguments. In a successful rebuttal, support for a rival claim is found. As a result, the original claim becomes controversial. We identify the following rebutting argument moves: (i) proof by contradiction; (ii) reductio ad absurdam; and, generally, (iii) establishing alternative arguments for rival conjectures. In Table 4 we show that all of the argument moves can for the most part be realized using already implemented claim support functions.

Example

We return to the Bermuda problem for an example of dialectical argumentation. The argument starts with Side-1 looking for support for the claim "british subject". Support is found and presented, as in Figure 2. The current argument state is check for Side-1, and control is given to Side-2. Side-2 attempts to refute the arguments put forward by Side-1. The conflict set of possible argument moves is the following:

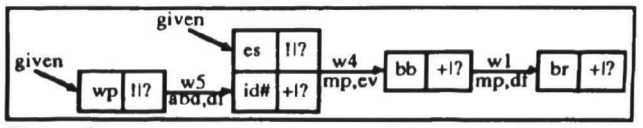

Figure 2.

refute br: i) undercut br: find exception to bb->br
ii) rebut br: find proof by contradiction, reductio, or alternative argument for ~br
refute bb: iii) undercut bb: show insufficient evidence
iv) rebut bb: find proof by contradiction, reductio, or alternative argument for ~bb
refute es: v) rebut es: find proof by contradiction, reductio, alternative argument for ~es
refute id#: vi) undercut id#: show id# is unneeded explanation for wp
vii) rebut id#: find proof by contradiction, reductio, or alternative argument for ~id#
refute wp: viii) rebut wp: find proof by contradiction, reductio, or alternative argument for ~wp

Finding an exception to the current "bb" support for "br" would have the strongest result, by tearing down the current argument and establishing an argument for "~br". "Explaining away" wp could also affect "br" strongly, since if support for "id#" collapses, the whole argument collapses, and the original claim will be unsupported. Since the latter move attacks a weak reasoning type, its likelihood of success is expected to be higher. Side-2 chooses this move, which fails, as according to the knowledge base the only way of obtaining "wp" is to have "id#". Since Side-2 has not achieved its goal, it continues.

Next, Side-2 looks for an exception to the "bb -> br" argument. An exception warrant is found, but its support is only contingent, so Side-2 must try again. Remaining move choices are to find support for "~wp", "~id#", "~es", "~bb", "~br". Since "wp" and "es" are strongly supported, they are put at the end of the list. Following a coherence heuristic that says to argue as closely as possible in the argument structure to the original claim, Side 2 looks for support for "~br". Side-2 is successful: "bp" would support "br", but "~bp" is known to be the case. "Br" becomes controversial, a check for Side-2, and Side-2 gives up its turn. The resultant argument is shown in Figure 3.

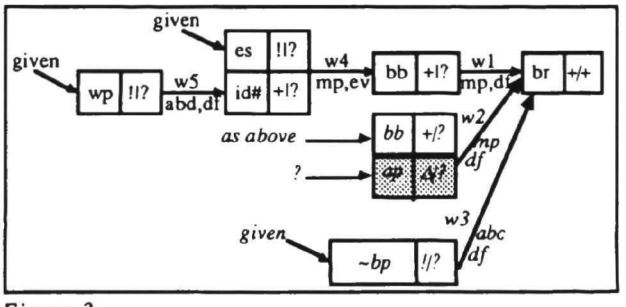

Figure 3.

Side-1 now attempts to refute the argument generated by Side-2. Argument moves are restricted to those which address Side-2's most recent argument:

refute ~br: i) undercut ~br: show the evidence ~bp is inapplicable
ii) rebut ~br: find proof by contradiction, reductio, or alternative arg for br

refute ~bp: iii) rebut ~bp: find proof for ~bp by contradiction, reductio, or alternative arg

Side-1 has already given its strongest argument in support of "br", and all of the moves in (i) and (ii) result in failure. Also, "~bp" turns out to be uncontroversial. Side-1 has no more moves, the qualification on the claim "br" shows that the claim is controversial, and Side-1 concedes the claim.

Summary and future work

We have presented elements of a theory of argumentation as a method for providing decision support and justification for plausible reasoning in weak theory domains. Any claim is presumed to be controversial, i.e., in need of support and vulnerable to objections against which it must be defended. Argumentation is seen as a vehicle for comparing the merits of support for competing claims. We defined the term "dialectically valid" to refer to claims that are "proved" via an argumentation process.

Two senses of argument, argument as supporting explanation and argument as dialectical process, are identified. The complete theory includes both of these views of argument. The format of a two-sided argument is used to intertwine the strengths and weaknesses of support for competing claims so that arguments can be refuted and directly compared, and to provide for more efficient generation of arguments. We mapped the two main tasks for dialectical argumentation, supporting and refuting claims, to argument moves that implement them. Finally, we outlined an algorithm for generating dialectical arguments, and gave an example of a dialectical argument.

Future work will include adding global argumentation strategies to the local tactics implemented by the heuristics for argument move selection. This could be used to generate coherent argument discourse for a given knowledge base and claim under consideration.

We will look at enhancing the current knowledge representation scheme. Ideas for augmented representation include distinguishing enabling warrants from causal warrants, e.g., "id# enables one to obtain working papers" (but one may choose not to), v. "rain causes wet grass"; distinguishing causal/default from strongly correlated/default warrants, e.g., "rain causes wet grass" v. "a Swede is not a Roman Catholic"; and warrants with wtypes "necessary" and "necessary and sufficient", .e.g., "oxygen is necessary for fire". It would then be useful to refine which argument moves apply to a particular supporting argument. Some of this happens now, e.g., evidential warrants are used to contradict evidential warrants in an argument ("conflicting evidence"; "missing evidence"). Expanded knowledge representation capabilities and additional argument moves following from new representation types would entail further categorization.

Also, formalizing dialectic argumentation as a generalization of game tree generation, with corresponding pruning operations, will be explored, to help control argument complexity.

References

Ashley, K. 1989. Toward a computational theory of arguing with precedents. In *Proceedings of the Second International Conference on Artificial Intelligence and Law*, 93-102. Vancouver, BC.

Barth, E.M. & Krabbe, E.C.W. 1982. *From axiom to dialog: a philosophical study of logics and argumentation*. Berlin, NY: Walter de Gruyter.

Flowers, M., McGuire, R., & Birnbaum, L. 1982. Adversary arguments and the logic of personal attacks. In W. Lehnert & M. Ringle eds., *Strategies for natural language processing* (pp. 275-294). Hillsdale, N.J.: Erlbaum Associates.

Freeman, K. & Farley, A. 1992. Argumentation in weak theory domains. In K. Ryan & R. Sutcliffe eds., *Proceedings of the Fifth Irish Conference on Artificial Intelligence and Cognitive Science*. London, UK, Berlin, FRG, Heidelberg, FRG, New York, NY: Springer-Verlag.

Horner, W. 1988. *Rhetoric in the classical tradition*. New York: St. Martin's Press.

Lenat, D.B. & Guha, R.V. 1990. *Building large knowledge-based systems*. Reading, MA: Addison-Wesley Publishing Co., Inc.

Pollock, J. 1991. A theory of defeasible reasoning. *International J of Intelligent Systems*, 6:33-54.

Pollock, J. 1992. How to reason defeasibly. *Artificial Intelligence*, 57:1-42.

Polya, G. 1968. *Mathematics and plausible reasoning* (2nd ed.) (vol. II). Princeton, NJ: Princeton University Press.

Rescher, N. 1977. *Dialectics: A controversy-oriented approach to the theory of knowledge*. Albany: State University of New York Press.

Rescher, N. 1976. *Plausible Reasoning*. Assen/Amsterdam, The Netherlands: Van Gorcum.

Toulmin, S. 1958. *The uses of argument*. Cambridge: Cambridge University Press.

Match and Mismatch in Phonological Context

Gareth Gaskell and William Marslen-Wilson
Centre for Speech and Language,
Birkbeck College, University of London,
London WC1E 7HX, England
ubjtp69@cu.bbk.ac.uk

Abstract

Earlier research suggests that the lexical access process in humans is highly intolerant of mismatch. When heard in isolation, a sequence such as [wɪkɪb] (wickib) is unacceptable as a token of *wicked* even though the mismatch is minimal. This observation is apparently inconsistent with the vulnerability of natural speech to phonological change. For example, the word *wicked* may be phonetically realised as [wɪkɪb] in the context of "*wicked prank*". This is an example of place assimilation, where the underlying /d/ in *wicked* acquires a labial character from the following labial consonant.

The cross-modal priming experiments reported here test the hypothesis that phonologically regular variation does not in fact create mismatch when it occurs in the appropriate context. Subjects heard tokens like [wɪkɪb] embedded in either phonologically viable context (where the following word was *prank*) or in unviable context (where the following word was *game*). When heard in unviable context, the distorted tokens produced a strong mismatch effect. In contrast, the distorted tokens in viable context primed as strongly as the undistorted words. These results suggest that the on-line processes of speech interpretation and lexical access must perform some kind of phonological inferencing when interpreting speech at the lexical level.

Introduction

This paper is concerned with the processes involved in the comprehension of spoken language. It is generally assumed that speech recognition entails some kind of matching process between speech input and the lexical representations of words, with access to meaning depending on the outcome of this process. In recent years, a number of studies have focused on the effect of distorted input on this process, producing some rather counter-intuitive results. These studies have indicated that even small deviations in the speech input are sufficient to effectively block access to meaning.

This finding is surprising given that listeners are able to comprehend speech in very variable circumstances. For example, the listener can cope with changes in voice quality, accent and manner as well as phonological variation. Some forms of phonological variation produce precisely the type of distortion which, according to our current model, should mismatch. Our research is an attempt to understand this apparent paradox, examining in detail the notions of match and mismatch. We will focus on one particular type of phonological variation – place assimilation.

The lexical access process

Evidence for the intolerance of the lexical access system to mismatch comes from a number of cross-modal priming studies. Marslen-Wilson and Gaskell (1992) looked at the effect of word-final deviation on the ability of a word to prime an associated target. For example, the priming effects of the tokens /grotɛsk/ and /grotɛst/ were compared by measuring the response to the visually presented related word, *ugly*. The three types of prime word; undistorted (/grotɛsk/), distorted (/grotɛst/) and unrelated control were presented either complete or with the final consonant cut off. This allowed comparison of the priming effects just before and just after the distortion occurred.

The results showed that although there were strong priming effects (35 ms) for the undistorted tokens, the distorted tokens showed no priming unless the final mismatching phoneme was cut off. This was true even for a subset of the stimuli in